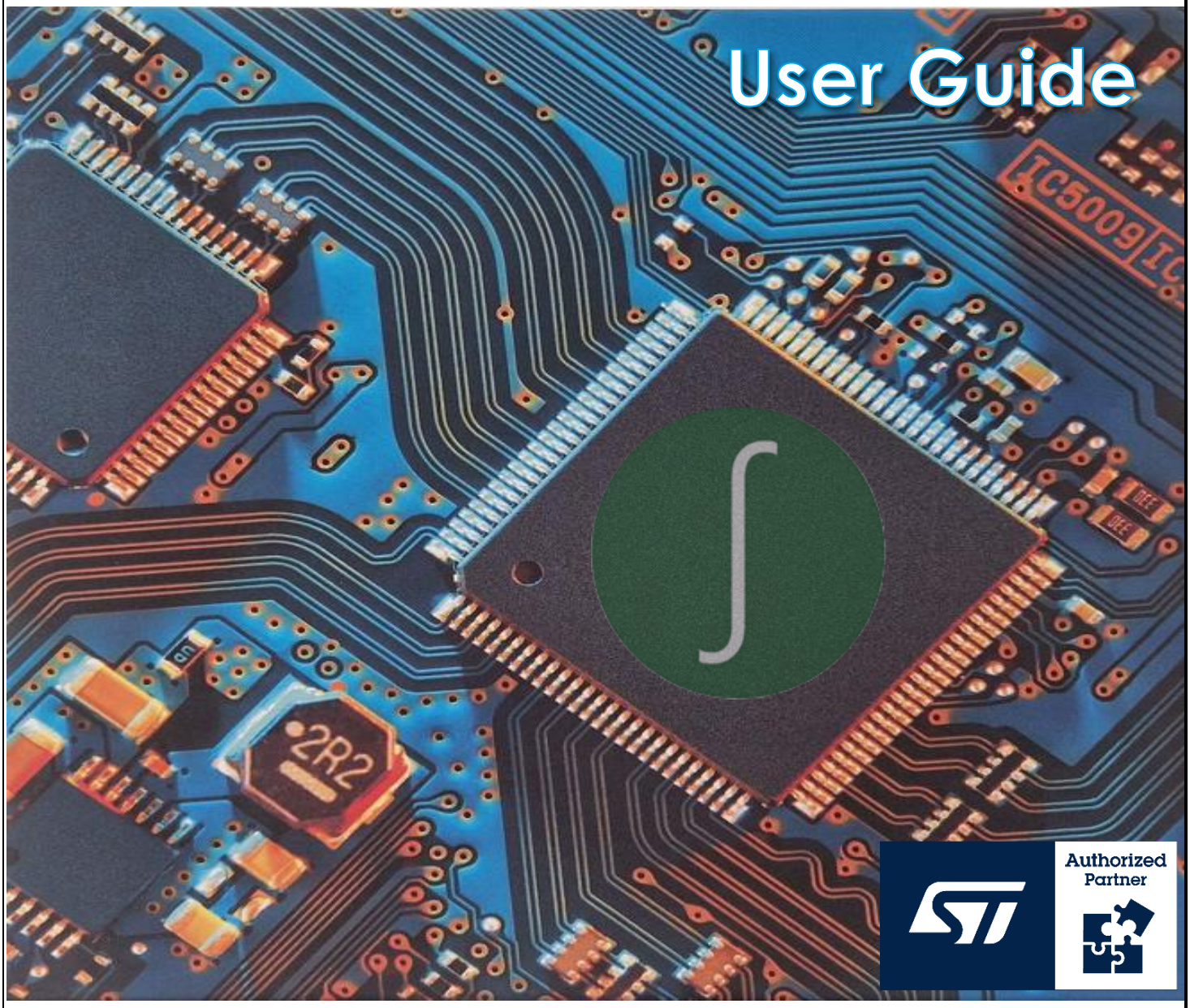

Smart Embedded®

Interface Description

ETEMB0xx027 Series

PCB 20-21194-4

Created by : Channing Hu

1. REVISION HISTORY

Date	Page, change	Version
2026.02.02		V1Prel

Reviewed by: Kenneth Blaabjerg Fog/Aaron Rath

Legal Disclaimer:

THIS INFORMATION / SOFTWARE IS PROVIDED BY COPYRIGHT HOLDERS AND CONTRIBUTORS "AS IS" AND ANY EXPRESS OR IMPLIED WARRANTIES, INCLUDING, BUT NOT LIMITED TO, THE IMPLIED WARRANTIES OF MERCHANTABILITY AND FITNESS FOR A PARTICULAR PURPOSE ARE DISCLAIMED. IN NO EVENT SHALL THE COPYRIGHT HOLDER OR CONTRIBUTORS BE LIABLE FOR ANY DIRECT, INDIRECT, INCIDENTAL, SPECIAL, EXEMPLARY, OR CONSEQUENTIAL DAMAGES (INCLUDING, BUT NOT LIMITED TO, PROCUREMENT OF SUBSTITUTE GOODS OR SERVICES; LOSS OF USE, DATA, OR PROFITS; OR BUSINESS INTERRUPTION) HOWEVER CAUSED AND ON ANY THEORY OF LIABILITY, WHETHER IN CONTRACT, STRICT LIABILITY, OR TORT (INCLUDING NEGLIGENCE OR OTHERWISE) ARISING IN ANY WAY OUT OF THE USE OF THIS SOFTWARE, EVEN IF ADVISED OF THE POSSIBILITY OF SUCH DAMAGE.

2. INTRODUCTION

ETEMxB0xx027 are Smart Embedded® modules equipped with IPS-TFT panels, touch sensors, and a common driver board equipped with STM32 Cortex M33 series MCU.

This document covers the following modules:

Module Part No.	Size	TFT Resolution
ETEMB043027XDHAL	4.3”	480 x 272
ETEMB050027XDHAL	5”	800 x 480
ETEMB057027XDHAL	5.7”	640 x 480
ETEMB070027XDHAL	7”	800 x 480

This document describes the interfaces on the board in detail.

3. TABLE OF CONTENTS

1. REVISION HISTORY 2
2. INTRODUCTION 3
3. TABLE OF CONTENTS 4
4. MODULE DESCRIPTION 5
4.1 GENERAL 5
4.2 BLOCK DIAGRAM ETEMB0XX027XDHAL 6
4.3 TFT BACKLIGHT AND TOUCH INTERFACE 8
4.5 MEMORY OPTIONS 8
5. HARDWARE CONNECTIONS 9
5.1 POWER INPUT ON 0XX027XDHAL MODULE, CN1 9
5.2 CAN + RS485, CN2 10
5.2.1 SCHEMATIC OF CAN + RS485 INTERFACE 11
5.3 USB OTG, CN3 12
5.11 SWD /ST_LINK, CN4 13
5.12. SDCARD, CN5 14
5.12.3EXPANSION CONNECTOR, CN6 15

4. MODULE DESCRIPTION

4.1 GENERAL

This Smart Embedded module has everything needed to build a modern Graphic User Interface Module. The MCU uses is a Cortex-M33 series STM32U599 with an integrated TFT controller.

EDT Smart Embedded boards support TouchGFX and FreeRTOS. We have implemented a couple of commonly used Industrial interfaces with driver chips to connect to an external system.

The following interfaces are available as standard on the Evaluation Modules:

- Power connector
- CAN, RS485, and USB CDC
- SD Card connector
- Expansion connector
- Programming interface for ST-LINK/V2/V3SET is also provided.

For Electrical/Timing Specifications please consult the STM32U599NIH6 Datasheet.

https://www.st.com/en/microcontrollers-microprocessors/stm32u599-5a9/documentation.html

(Select the DS13633 version)

For Interface IC specifications we have included links to datasheets.

4.2 BLOCK DIAGRAM ETEMB0XX027XDHAL

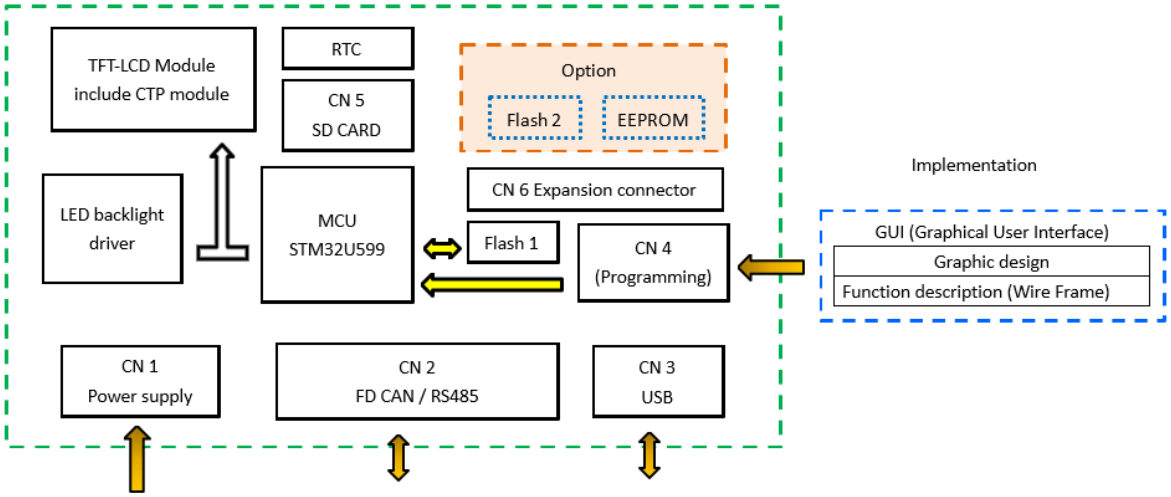

CN1 (POWER):	TOPWISE A2001WV-S-3P-LCP or equivalent
Mating Connector:	Female Socket: A2001H-3P Terminal: A2001-T (AWG:24-30)
CN2 (RS485 + CAN):	JST B6B-PH-SM4-TB or equivalent
Mating Connector:	Female Socket: PHR-6 Terminal: SPH-002T-P0.5S
CN3 (USB-TYPE C):	HRS CX80B2-24P or equivalent
Mating Connector:	Standard USB-C type
CN4 (SWD):	TOPWISE A1002WV-S-6P-LCP or equivalent
Mating Connector:	Female Socket: A1002H-6P Terminal A1002-T (AWG:28-32)
CN5 (SD CARD):	DM3CS-SF (HIROSE) or equivalent
Recommendation:	Micro SD card, class 10, 16GB
CN6: (Expansion)	JST 30P5.0-JMCS-GAN-A-TF or equivalent
Mating Connector:	30R-JMCS-GAN-TF or equivalent

4.2.1 picture of Driver PCB

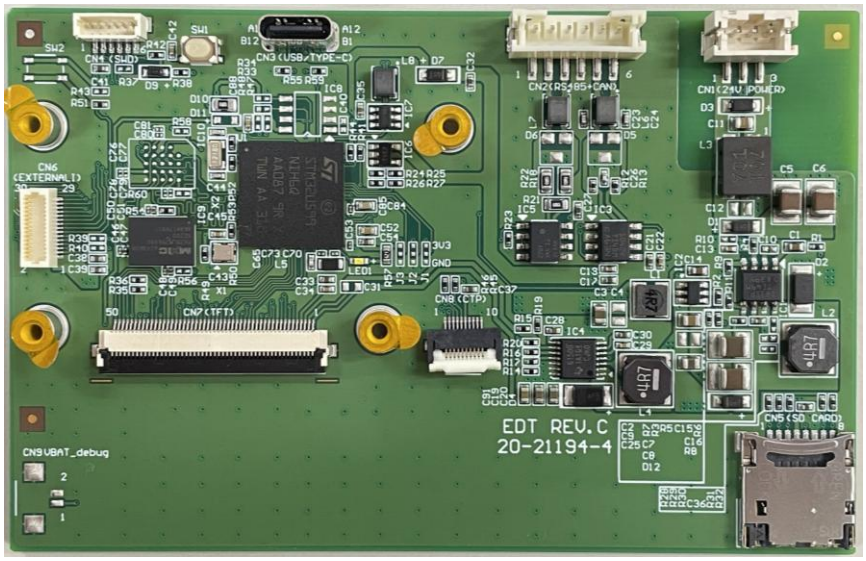

ETEMB0430027XDRAL

ETEMB0500027XDRAL

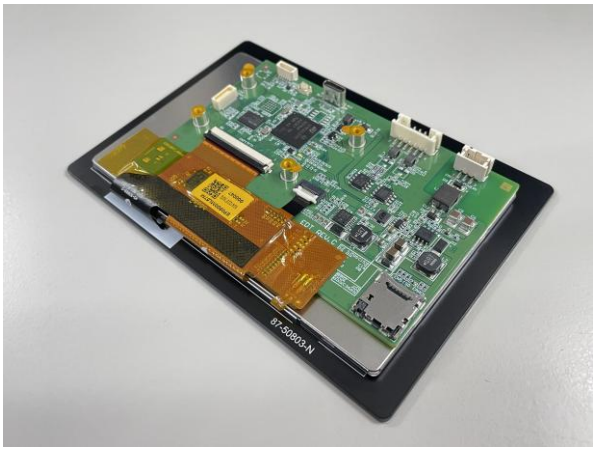

ETEMB0570027XDRAL

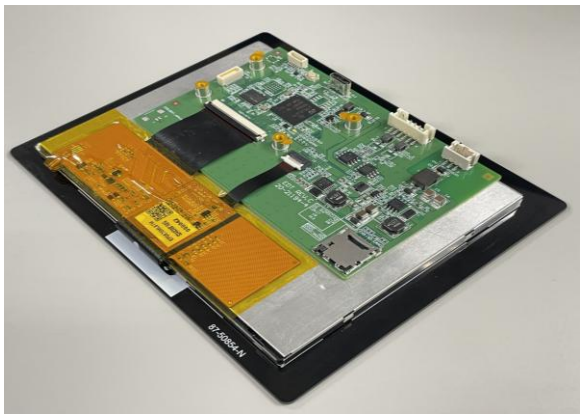

ETEMB070027XDRAL

4.3 TFT BACKLIGHT AND TOUCH INTERFACE

All circuits necessary to drive the TFT Display, Backlight and communication to the **Touch System** are integrated on the Board. Backlight intensity can be controlled by the application via a PWM signal on PE5.

There are functions available in the BSP for setting the PWM value.

4.5 MEMORY OPTIONS

As standard the Modules have 2.5MB Internal SD RAM, 2MB Internal Flash and 32MB external OCTOSPI Flash.

There are additional footprints for an extra OCTOSPI Flash and a SO-8 Standard EEPROM.

OCTOSPI Flash is used for storing Application Program, Fonts and Graphic elements.

Changing the Standard Memory to another configuration will require a minimum order qty.

5. HARDWARE CONNECTIONS

In this section the HW interfaces and supply voltage requirements are described.

5.1 POWER INPUT ON 0XX027XDHAL MODULE, CN1

The pin function, name and description can be seen in the following table:

Pin #	Name	I/O	Description
1	VP_IN	P	Positive Power Supply input (7-36V)
2	VP_EN	I	Power Supply Enable (Internally Pull Up, Pull Low to Power Down)
3	VSS	P	Ground

* Note: Pin 2 has a 10k Pull-up to VP_IN (after reverse voltage diode).

Pin types:
P - Power pins
I - Input
O - Output
IO - Bi-directional pin

5.2 CAN + RS485, CN2

Pin #	Name	I/O	Description
1	VSS	P	VSS
2	RS485_A	I/O	RS485A
3	RS485_B	I/O	RS485B
4	VSS	P	VSS
5	CANL	I/O	FDCANL
6	CANH	I/0	FDCANH

RS485: USART2 on STM32U599 is used.
USART2_RX: PD6
USART2_TX: PD5
USART2_DE: PD4 (Active High, Set LOW when Receiving)

FDCAN: FDCAN1 on STM32U599 is used.
FDCAN1_RX: PB8
FDCAN1_TX: PB9
CAN_STB: PB5

The RS485 interface Chip used is **SN65HVD72DR** from Texas Instruments. The datasheet can be downloaded from TI.com using the following link.

http://www.ti.com/lit/ds/symlink/sn65hvd78.pdf

The CAN interface Chip used is **TCAN1042HVD** from Texas Instruments. The datasheet can be downloaded from TI.com using the following link.

http://www.ti.com/lit/ds/symlink/tcan1042hv.pdf

The schematic of RS485 and CAN Interface can be found on the next page.

5.2.1 SCHEMATIC OF CAN + RS485 INTERFACE

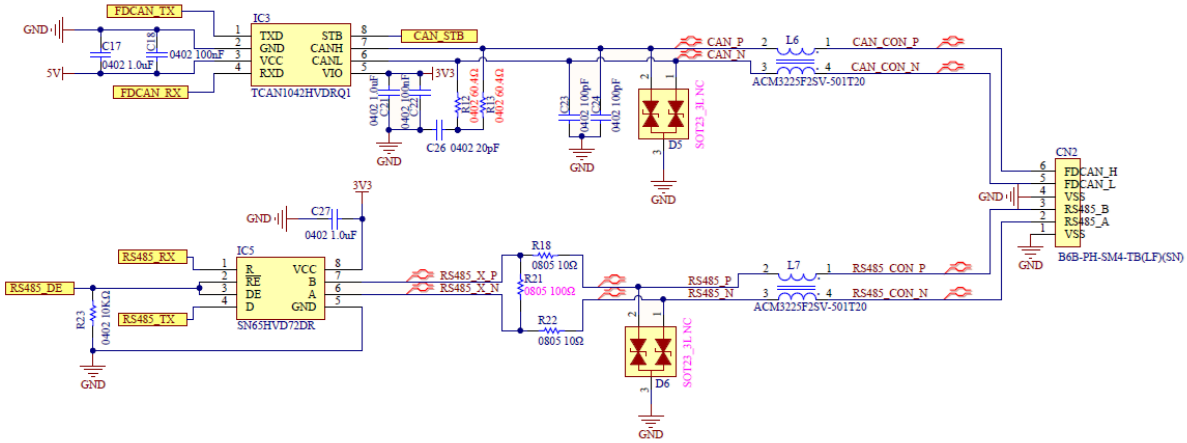

The **CAN interface** is terminated with **R12**, **R13**, and **C26** which can be removed if not used. D5 is a mounting option.

IC Protection features:
– HBM ESD protection: ±16 kV
– IEC ESD protection up to ±15 kV
– Bus Fault protection: ±70 V

The **RS485 lines** are terminated with **R21** which can be removed if not needed. D6 is a mounting option.

IC I/O Protection: Bus
– >±15 kV HBM Protection
– >±12 kV IEC 61000-4-2 Contact Discharge
– >±4 kV IEC 61000-4-4 Fast Transient Burst

5.3 USB OTG, CN3

USB OTG Port is equipped with a **USB C** connector.

Pin #	Name	I/O	Description
A1, A12, B1, B12	VSS	P	GND
A4, B4	VBUS	P	Source / Sink 5V
A5,	CC1	I/O	Configuration Channel 1, 5K1 to VSS
B5	CC2		Configuration Channel 2, 5K1 to VSS
A6, B6	D1+	I/O	USB D+
A7, B7	D1-	I/O	USB D-
S6	SHIELD	P	Connected to VSS

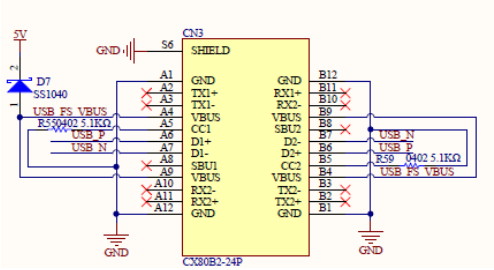

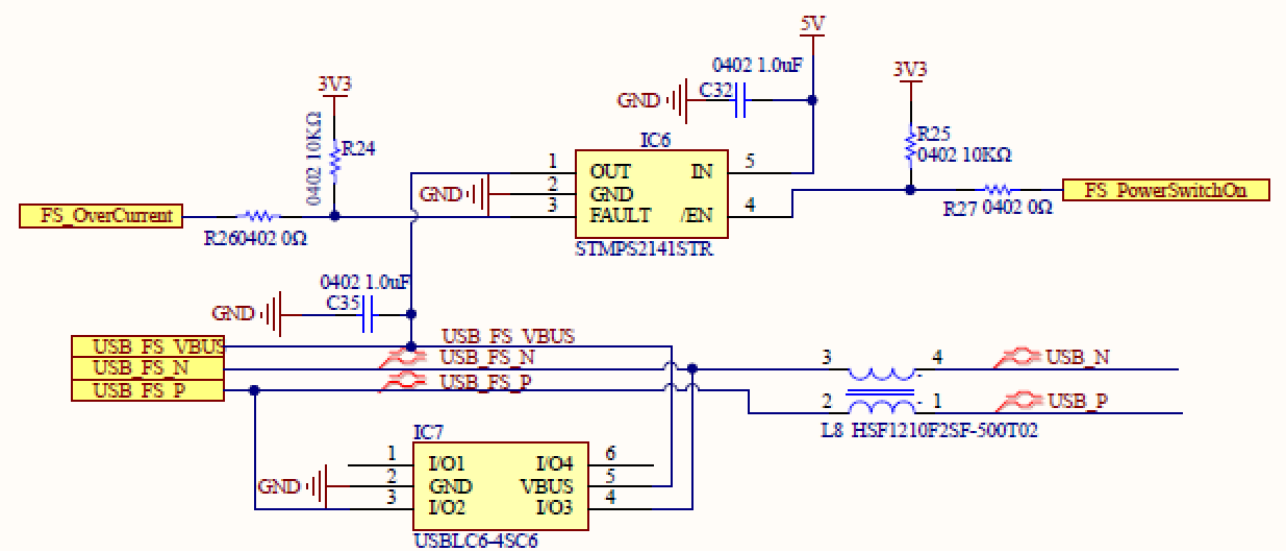

FS_OverCurrent: PI14
FS_PowerSwitchOn: PI15
USB_FS_VBUS: PA9
USB_FS_N: PA11
USB_FS_P: PA12

A USB CDC Class has been developed.

5.11 SWD /ST_LINK, CN4

CN4 provides a programming interface for SWD / ST-LINK

Pin #	Name	I/O	Description
1	VDD	P	Target VDD connect to Pin 1 on ST-LINK/V2
2	SWO	O	Not used for programming
3	SWDIO	IO	Connect to Pin 7 on ST-LINK/V2
4	SWCLK	I	Connect to Pin 9 on ST-LINK/V2
5	NRST	I	RESET, connect to Pin 15 on ST-LINK/V2
6	VSS	P	GND, connect to Pin 4 on ST-LINK/V2

STM32CubeProgrammer programming software can be downloaded from STMicroelectronics. (Registration is required.)

https://www.st.com/en/development-tools/stm32cubeprog.html

Picture of ST-LINK programmer. 20-pin connector is used.

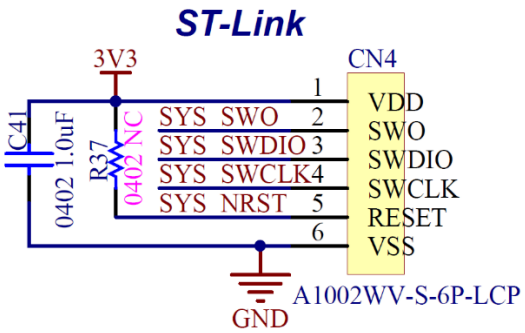

5.12. SDCARD, CN5

Pin #	Name	I/O	Description
1	DATA2	I/O	Data2
2	DATA3	I/O	Data1
3	CMD	I/O	Command / Response
4	VDD	P	VCC
5	CLK	I	CLK
6	VSS	P	VSS
7	DATA0	I/O	Data0
8	DATA1	I/O	Data1
9	GND1	P	Connector Shield
10	GND2	P	Connector Shield
11	GND3	P	Connector Shield
12	GND4	P	Connector Shield
13	DET	I	SDCARD Detect

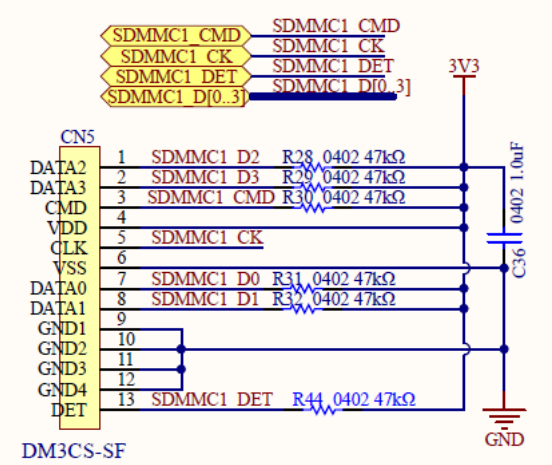

5.12.3 EXPANSION CONNECTOR, CN6

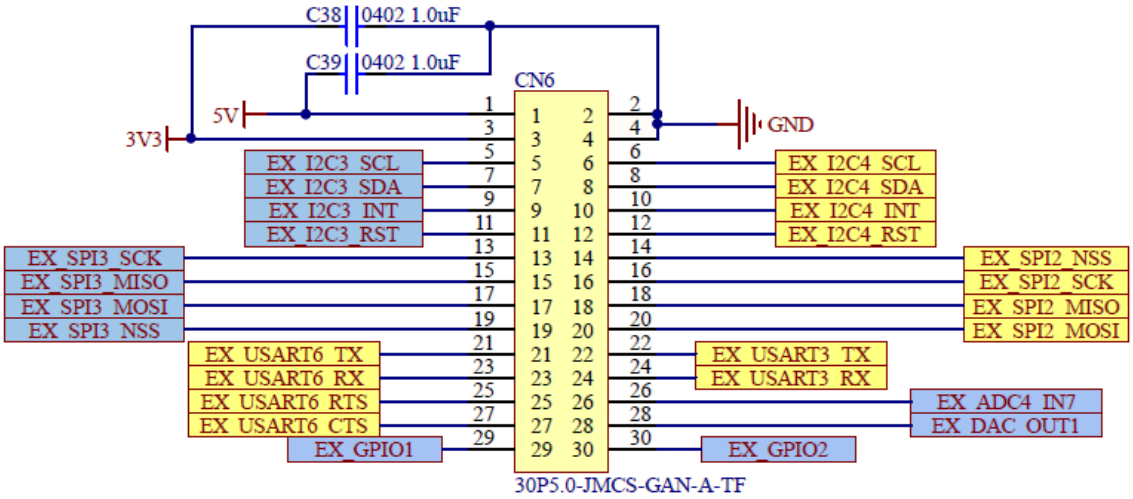

See next page for Expansion connector pinning description and alternate functions.

PIN NO.	SYMBOL	Alternate Functions				
		MCU I/O Port	GPIO	ADC/DAC	UART	TIMER
1	+5V OUT	-	-			
2	GND	-	-			
3	+3.3V OUT	-	-			
4	GND	-	-			
5	EX_I2C3_SCL	PG_7	GPIO		LPUART1_TX	
6	EX_I2C4_SCL	PB_6	GPIO		USART1_TX	
7	EX_I2C3_SDA	PG_8	GPIO		LPUART1_RX	
8	EX_I2C4_SDA	PB_7	GPIO		USART1_RX	
9	EX_I2C3__INT	PG_6	GPIO		LPUART1_RTS/_DE	
10	EX_I2C4__INT	PE_4	GPIO			TIM3_CH2
11	EX_I2C3_RST	PG_5	GPIO		LPUART1_CTS	
12	EX_I2C4_RST	PE_1	GPIO			TIM17_CH1
13	EX_SPI3_SCK	PG_9	GPIO		USART1_TX	
14	EX_SPI2_NSS	PI_0	GPIO			TIM5_CH4
15	EX_SPI3_MISO	PG_10	GPIO		USART1_RX	
16	EX_SPI2_SCK	PI_1	GPIO			
17	EX_SPI3_MOSI	PG_11	GPIO		USART1_CTS	TIM15_CH2
18	EX_SPI2_MISO	PI_2	GPIO			TIM8_CH4
19	EX_SPI3_NSS	PG_12	GPIO		USART1_RTS	
20	EX_SPI2_MOSI	PI_3	GPIO			
21	EX_USART6_TX	PJ_3	GPIO			
22	EX_USART3_TX	PC_4	GPIO	ADC1_IN13 ADC2_IN13 ADC4_IN22		
23	EX_USART6_RX	PJ_4	GPIO			
24	EX_USART3_RX	PC_5	GPIO	ADC1_IN14, ADC2_IN14 TAMPIN4		
25	EX_USART6_RTS	PJ_5	GPIO			
26	EX_ADC4_IN7	PG_0	GPIO			
27	EX_USART6_CTS	PJ_7	GPIO			
28	EX_DAC1_OUT1	PA_4	GPIO	ADC1_IN9 ADC2_IN9 ADC4_IN9		
29	EX_GPIO1	PJ_2	GPIO			
30	EX_GPIO2	PJ_6	GPIO			

- **MOST I/O PINS CAN BE USED AS GPIO, INPUT/OUTPUT/ANALOG, EVENTOUT AND EXTIX.**
- **PLEASE CONSULT THE DATASHEET.**